Databuses: ARINC 664 / AFDX

CEC 300: Computing in Aviation and Aerospace

Authors: Richard S. Stansbury

EMBRY-RIDDLE
Aeronautical University

Needs

- Bandwidth: the amount of data generated in airplanes have considerably increased in recent years.
- Need for bidirectional communication to support complex protocol.
- Increase the sharing of data: interdependence of systems is increasing (data bases, clocks).
- Flexibility of communication architectures.
- Use of standards protocols of communications:
  - Aircraft are connected with a large network

One solution…

- Airbus proposed a solution called **Avionics Full Duplex Ethernet (AFDX®)**
  - **Avionics:** Network adapted to avionics constraints
  - **Full Duplex:** The subscriber transmits and receives at the same time
  - **Switched:** The data are switched, necessary to use AFDX switch to connect to subscriber.
  - **Ethernet:** conformity to the standard Ethernet 802.3

- Ready for safety critical functions

- Standardized as **ARINC 664 Part 7**

AFDX properties

- **Virtual Link (VL)**
  - Channel between one transmitter and several receptors with:
    - Guaranteed bandwidth
    - Limited latency and jitter
    - Static path

- **A deterministic network**
  - For each VL in RX the transfer time of the data is bounded and computed by a formal approach (network calculus) (formal methods).

AFDX Standardization

Specified in Aeronautical Radio Incorporated (ARINC)

ARINC Specification 664, Aircraft Data Network

Defines an Ethernet data network for aircraft installation.

It is developed in multiple parts, listed as follows:

- Part 1 – Systems Concepts and Overview
- **Part 2 – Ethernet Physical and Data Link Layer Specifications**
- Part 3 – Internet-based Protocols and Services
- Part 4 – Internet-based Address Structures and Assigned Numbers
- Part 5 – Network Interconnection Services and Functional Elements
- Part 6 – Reserved
- **Part 7 – Avionics Full Duplex Switched Ethernet (AFDX®) Network**
- Part 8 – Upper Layer Services

Defines Ethernet physical parameters & general and specific guidelines for the use of **IEEE 802.3** compliant Ethernet.

Defines a deterministic network on data link layer.

Redundancy – Independent networks

Main Elements

- **AFDX® End Systems (E/S):**
  Network interface card (NIC) to send and receive messages
- **AFDX® Switches (SW):**
  Smart hardware equipment for frame policing

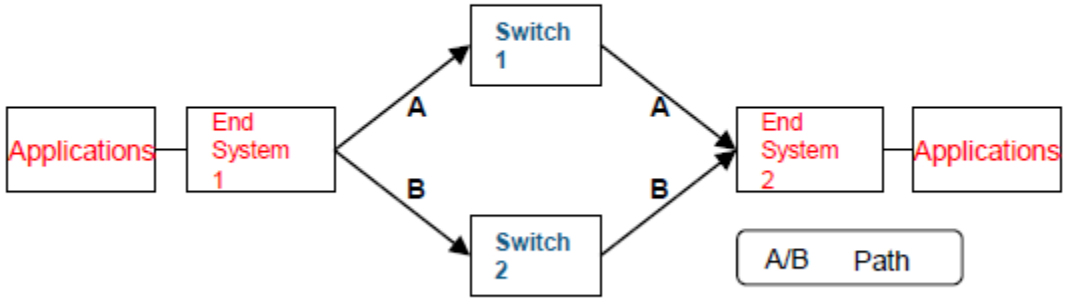

Two independent networks A + B

- Full duplication of network
  - separate power & different routing of cables
- End-Devices handle redundancy
- Packets duplicated on device only
- Network unaware of duplication / redundancy

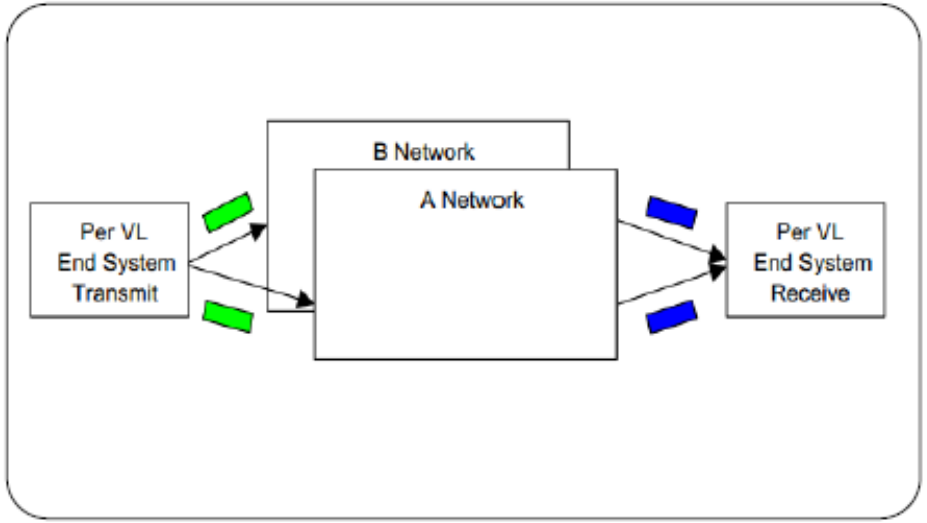

EMBRY-RIDDLE Aeronautical University

AFDX – Enforcement

ARINC 664 P7 - Section 3.2

Virtual Link (VL)

- Multicast communication stream
- Following traffic specification
- Static engineered routes

Two lines of defence

- End-Device send conformant traffic (Shaping)
- Every switch enforces conformance (Policing)
- No “healing” of ill-behaving streams, just drop

Every communication in AFDX® is done through a VL

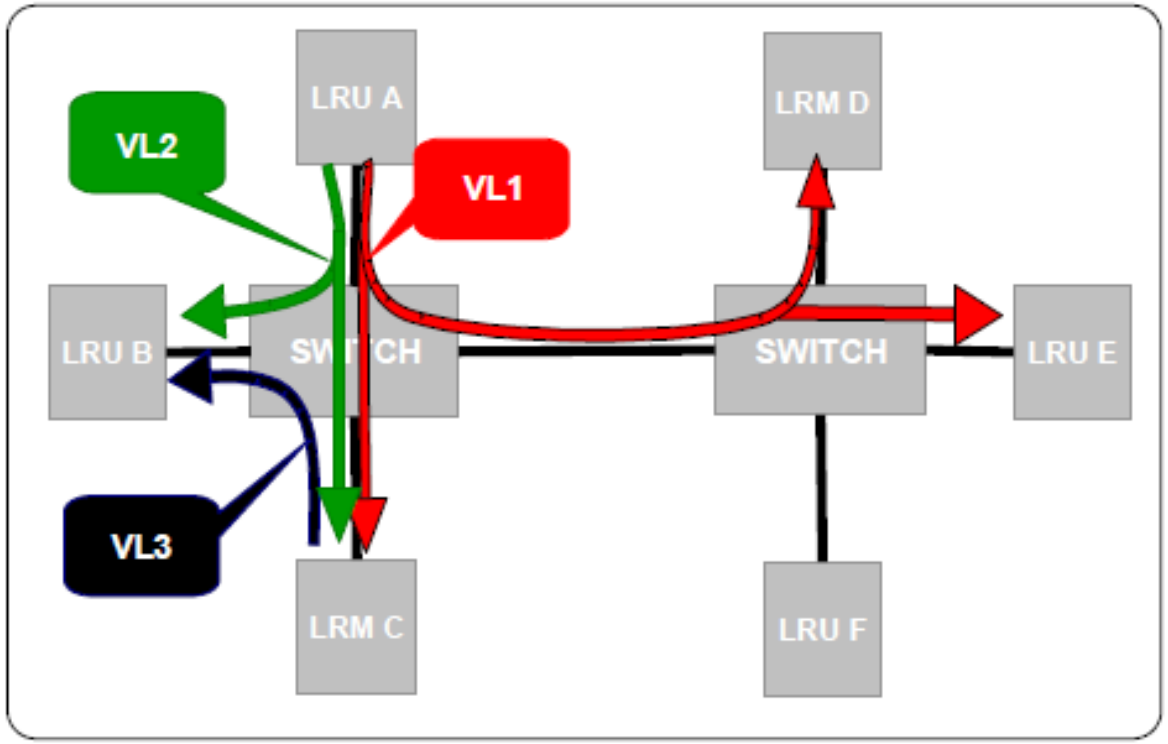

EMBRY-RIDDLE
Aeronautical University

AFDX – Enforcement

Formal Verification

- Network Calculus is used to find upper bound for:
  - Latency / Jitter
  - Buffer Size
- Accepted for certification in DAL-A Aircraft systems
  - Similar levels to SIL-4 or ASIL-D

- Additional requirement:
  - Network hardware needs to meet guaranteed maximum static latency and jitter (technology delay) considering most data are multicast transfer
  - Demonstrate all failure modes / absence of unused functions / dead code

DAL A – Design Assurance Level A. Catastrophic (failure can cause death).

$\mu AFDX$

The µAFDX® network is based on Ethernet frames from one subscriber switched by µStar toward all the other subscribers.

The mains properties of the µAFDX® technology are:

- Communication without any collision
- Guaranteed latency
- A communication without Master
- A broadcast communication, which allows all subscribers to receive all data ex-changed

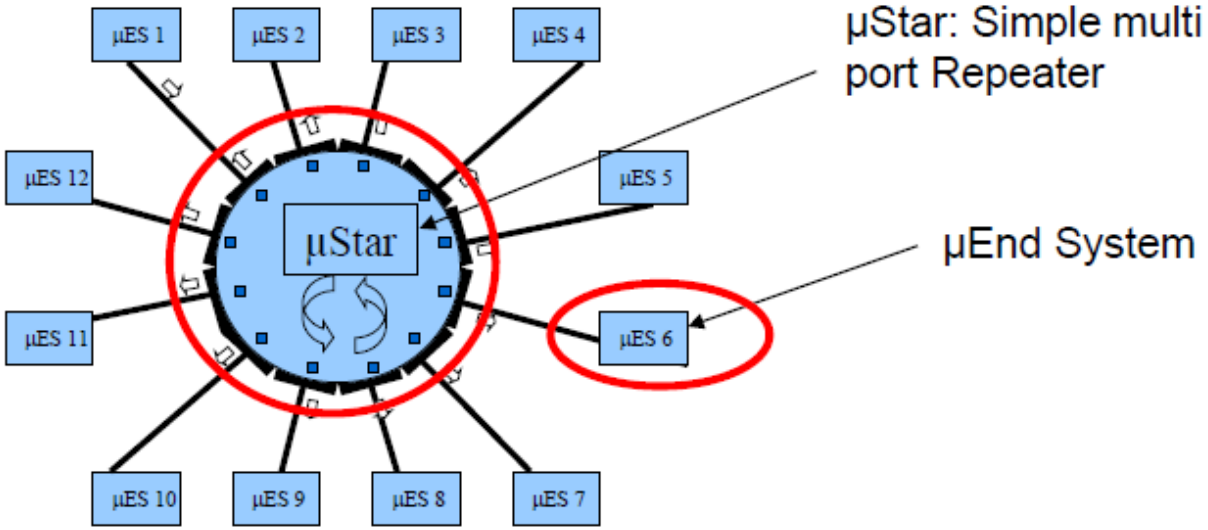

ADCN- Avionics Data Communication Network

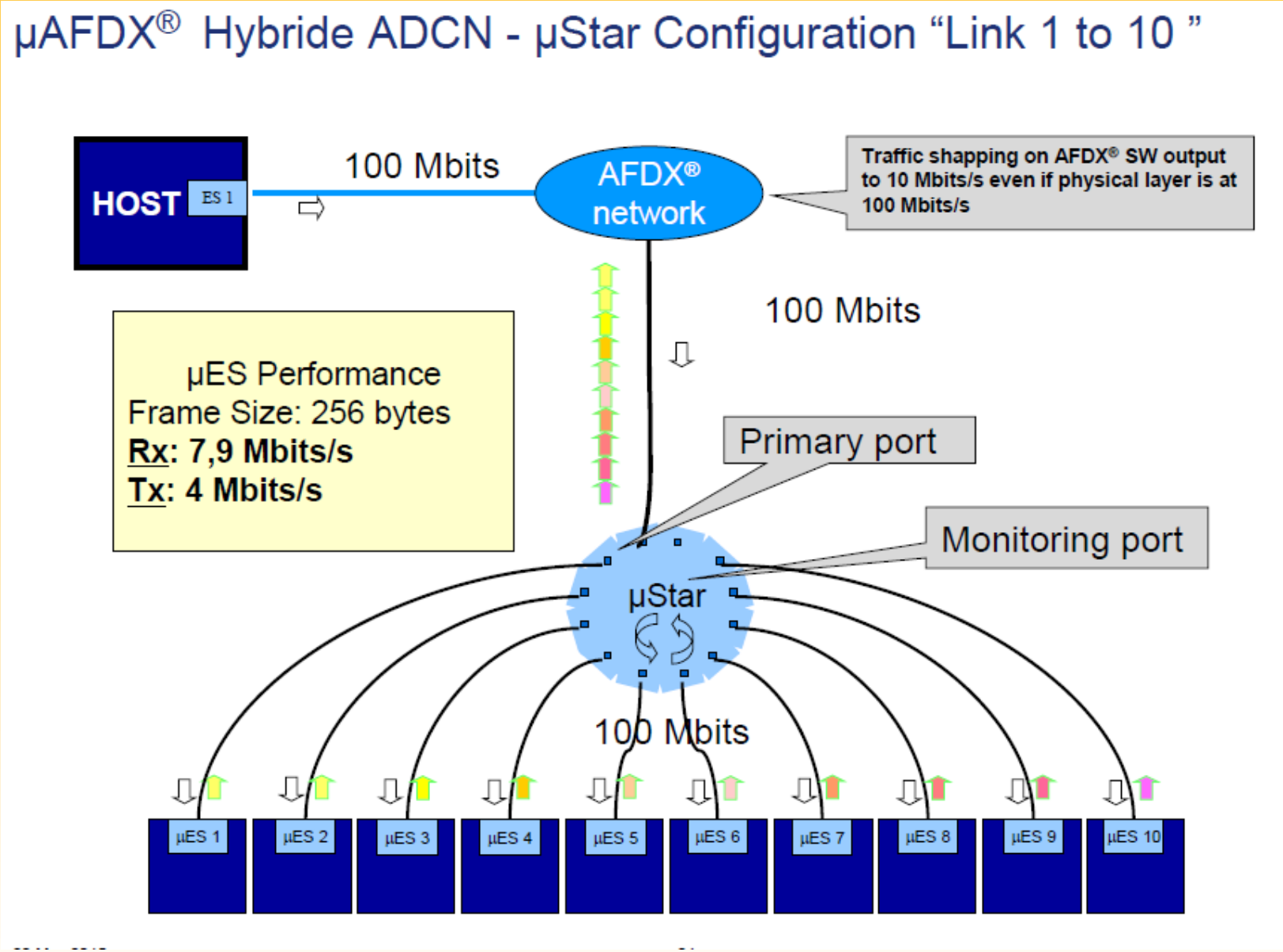

Key Inventions and Benefits

	Inventions	Capabilities	Benefits
AFDX®	Virtual Links to transfer data	Reduced Physical Links	Reduces Weight
	Maximum bandwidth allocation to each virtual link	Controlled Date Flow	Uninterrupted Flow of Data
	Deterministic behavior of Packet Switching Network	Guaranteed data delivery within bounded delay	Mixed Critical Applications
	Redundancy Check	Higher Reliability of Network	No Information Loss
	Data integrity check	Error Free data	No Malfunction
µAFDX®	Reduced Complexities of an End System	Cater to applications with low communication requirements	Reduced Size and Cost
	Facilitation of synchronization via network	Synchronous Data Transmission	Time- critical Applications
	Simple and Safer µSwitch	Master Slave, Private Bus	Replace CAN and ARINC429

Who uses AFDX?

- ✓ Airbus: A380, A350, A400M
- ✓ Boeing: B787
- ✓ Sukhoi: RRJ100
- ✓ COMAC: ARJ21
- ✓ Agusta Westland: AW101, AW149, AW 169, AH64
- ✓ Bombardier: Global Express, Cseries
- ✓ Irkut: MS-21
- ✓ ...

ADDITIONAL AFDX DETAILS

Physical vs. Logical Architecture

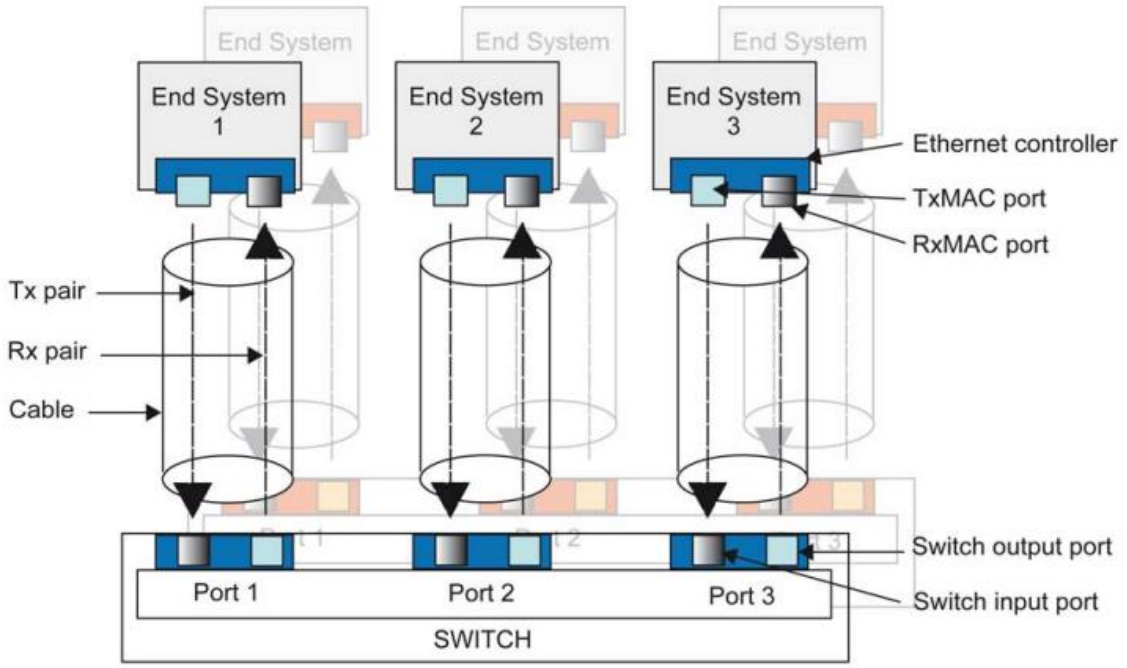

Figure 2: Physical topology of AFDX

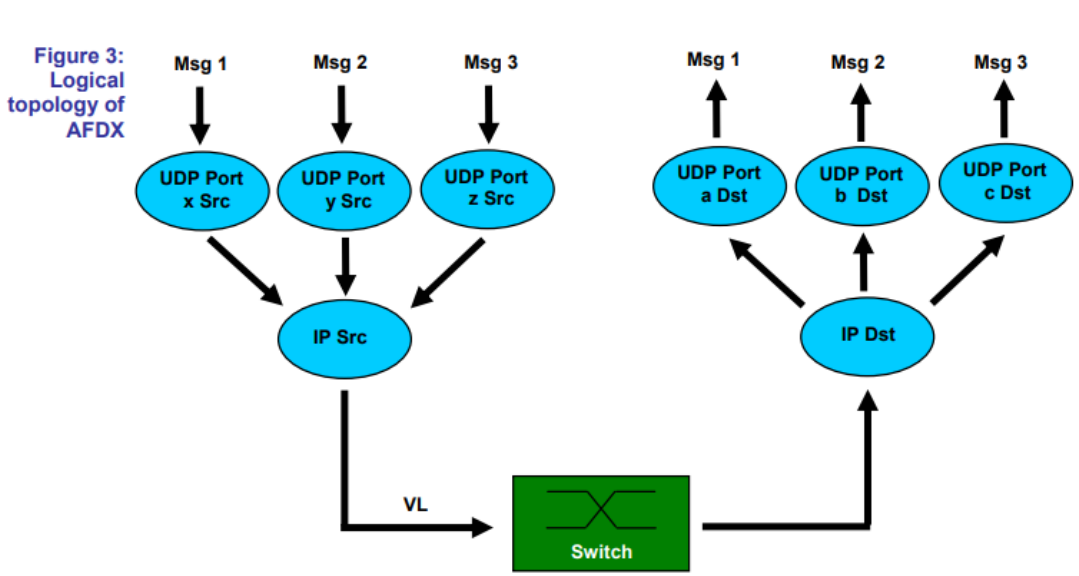

Figure 3: Logical topology of AFDX

Image Source: https://web.archive.org/web/20150618140031/http://www.techsat.com/fileadmin/media/pdf/infokiosk/TechSAT_TUT-AFDX-EN.pdf

EMBRY-RIDDLE Aeronautical University

VL Scheduling

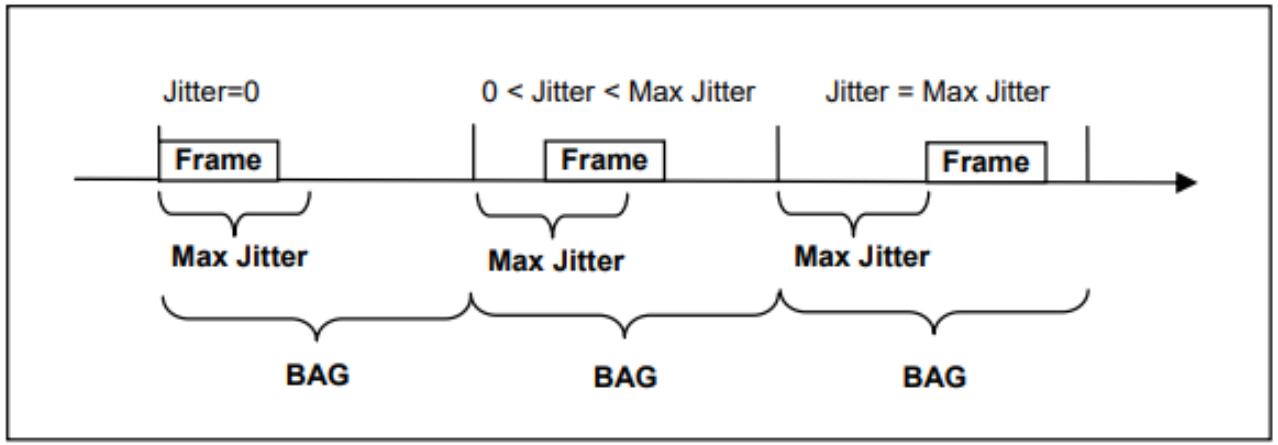

Figure 4: VL scheduling with jitter

- Located at the End Systems
  - Traffic shaping via VL Scheduler
  - Multiplexes frames from all VLs onto the physical layer
  - VL provides a stream of frames.
- Regulated by the Bandwidth Allocation Gap (BAG)
- Minimum space between messages
  - 1 – 128 ms (value must be power of 2)
  - Jitter is the upperbound on transmit latency (frame time offset)

Image Source: https://web.archive.org/web/20150618140031/http://www.techsat.com/fileadmin/media/pdf/infokiosk/TechSAT_TUT-AFDX-EN.pdf

Sub Virtual Link

- Regulates flow of frames onto the VL
- Enables optimization of the VL's bandwidth
- Supports at least 4 FIFO queues to ensure frames are evenly distributed across the stream

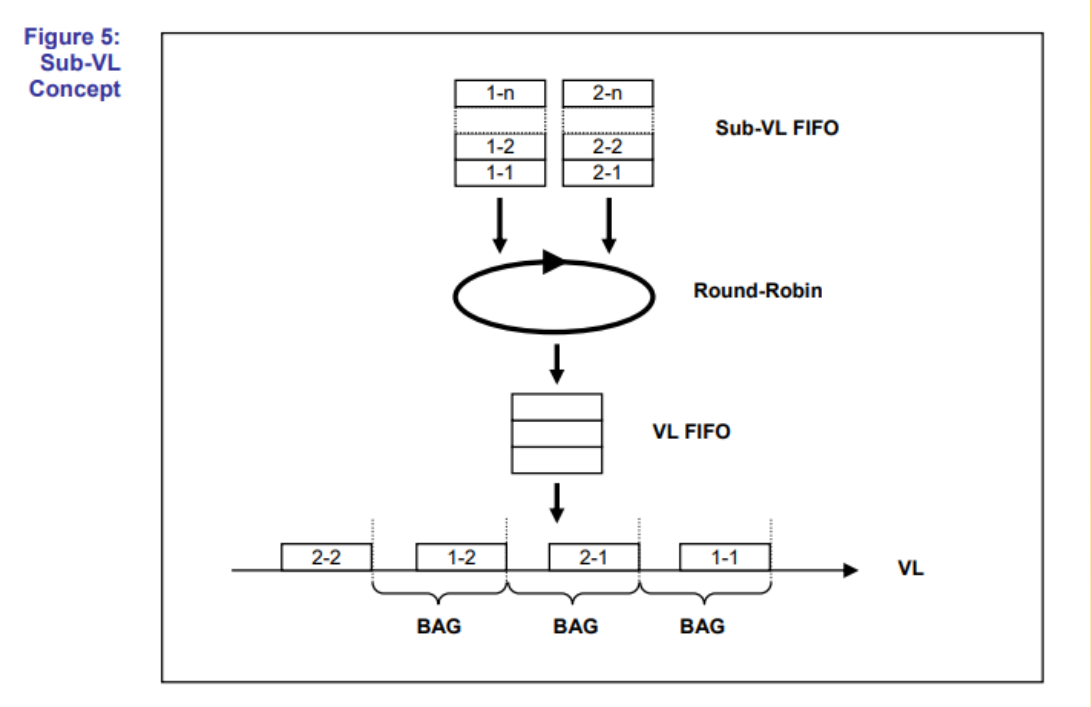

Image Source: https://web.archive.org/web/20150618140031/http://www.techsat.com/fileadmin/media/pdf/infokiosk/TechSAT_TUT-AFDX-EN.pdf

EMBRY-RIDDLE Aeronautical University

Communication Port Types

- **Receive Sampling Ports**
  - Buffer sufficient for one message.
  - Incoming messages overwrite previous message
  - Read at any time, always receive the most recent message.
- **Transmit Sampling Ports**
  - Continuously transmits the most recent message until new message received.
  - Then, new message is continuously transmitted.
- **Receive Queueing Ports**
  - FIFO queue for received messages
  - Application can read at any time, dequeuing and returning the message at the front of the queue.
- **Transmit Queueing Ports**
  - Transmits new messages in the queue port as fast as it can.
  - Each message is dequeued before transmission.
  - New messages are appended to the back of the queue.

Image Source: https://web.archive.org/web/20150618140031/http://www.techsat.com/fileadmin/media/pdf/infokiosk/TechSAT_TUT-AFDX-EN.pdf

AFDX Protocol Stack

- OSI Model

Layer			Protocol data unit (PDU)	Function[26]
Host layers	7	Application	Data	High-level protocols such as for resource sharing or remote file access, e.g. HTTP.
	6	Presentation		Translation of data between a networking service and an application; including character encoding, data compression and encryption/decryption
	5	Session		Managing communication sessions, i.e., continuous exchange of information in the form of multiple back-and-forth transmissions between two nodes
	4	Transport	Segment	Reliable transmission of data segments between points on a network, including segmentation, acknowledgement and multiplexing
Media layers	3	Network	Packet, Datagram[27]	Structuring and managing a multi-node network, including addressing, routing and traffic control
	2	Data link	Frame	Transmission of data frames between two nodes connected by a physical layer
	1	Physical	Bit, Symbol	Transmission and reception of raw bit streams over a physical medium

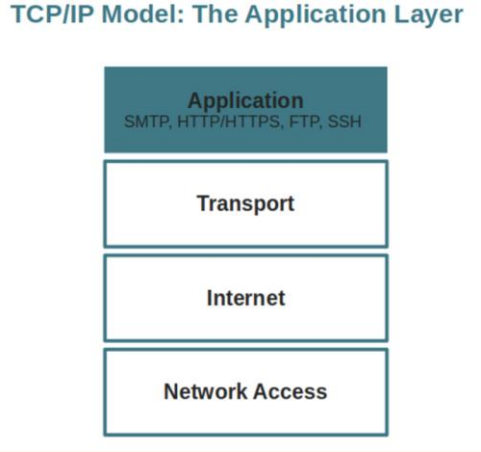

- AFDX
  - **Data Link Layer** - AFDX Media Access Control (MAC)
    - Like Ethernet MAC, but optional service number (SN) can be appended to the end of Ethernet Payload (used with integrity monitoring)
  - **Network Layer:** Internet Protocol (IP) Layer
  - **Transport Layer:** User Datagram Protocol (UDP) or Transmission Control Protocol (TCP)

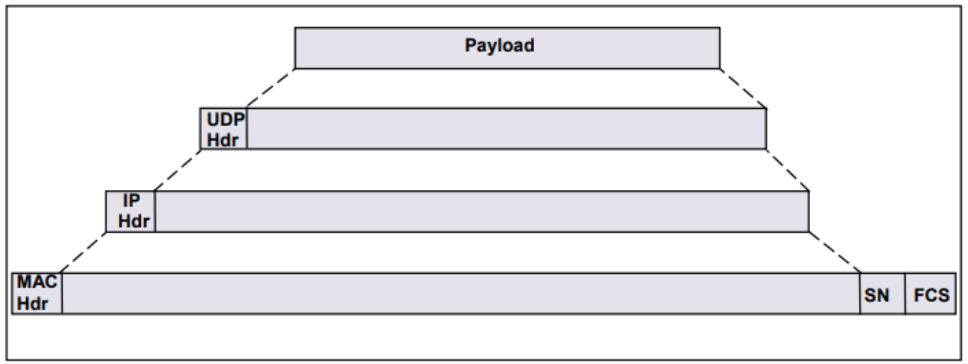

Figure 6: AFDX protocol stack

Image Source: https://web.archive.org/web/20150618140031/http://www.techsat.com/fileadmin/media/pdf/infokiosk/TechSAT_TUT-AFDX-EN.pdf

Reference: TCP vs. UDP Transport Layer Types

- **UDP**
  - IP-based
  - Connectionless
  - Does not guarantee delivery or order of received data packets
  - Fast and Efficient
  - Supports Multicast and Broadcast

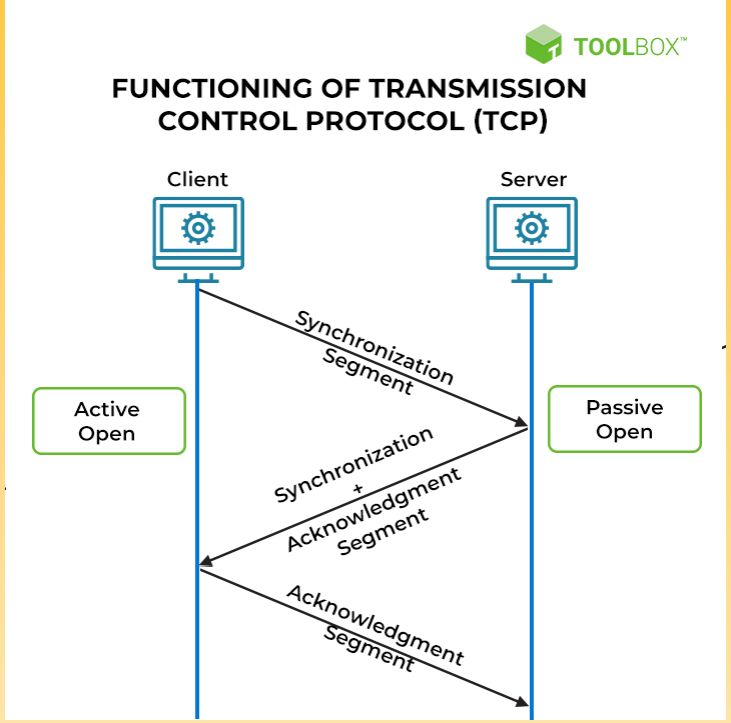

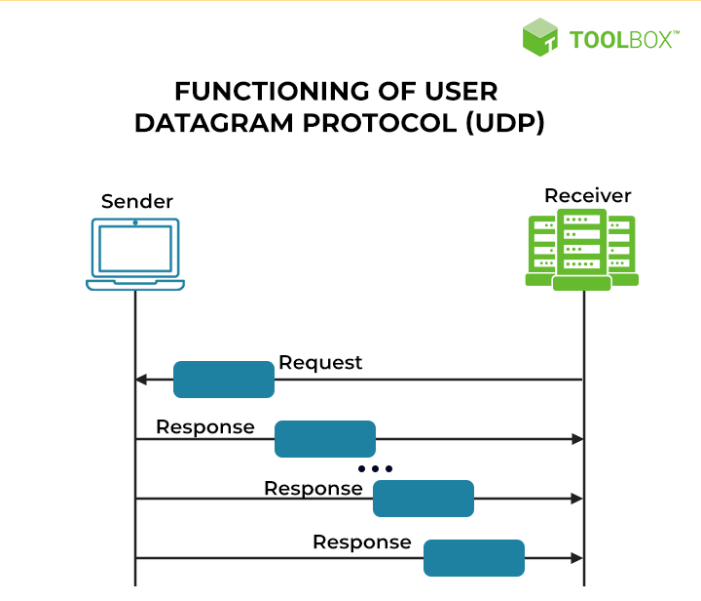

- **TCP**
  - Connect-Oriented
  - Dedicated connection prior to data transfer
  - Flow control
  - Congestion Control
  - Slower but reliable than UDP

Differences Between TCP and UDP

AFDX Frame Structure

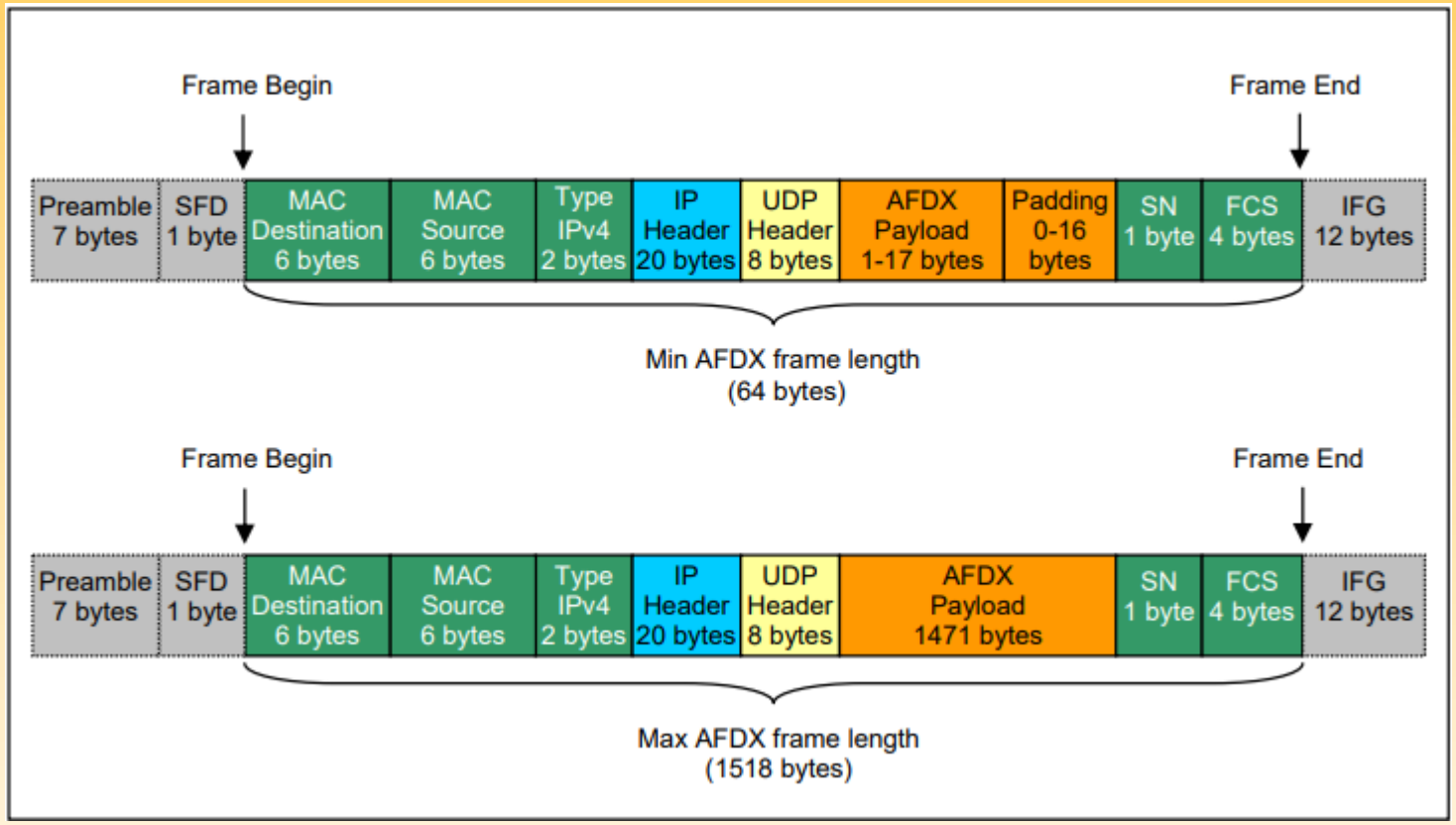

- **FCS** – Frame Check Sequence (4-byte)
  - Used to determine transmission error
  - Uses Cyclic Redundancy Check (CRC) checksum on data frame
  - Determine if frame is well formed
- **SFD** - Start frame delimiter (1 byte)
  - Indicates the start of the ethernet frame
- **IFG** – Interframe Gap (12 bytes)
  - Enforces minimum idle period between frames

Image Source: https://web.archive.org/web/20150618140031/http://www.techsat.com/fileadmin/media/pdf/infokiosk/TechSAT_TUT-AFDX-EN.pdf

Integrity Checking / Redundancy Management

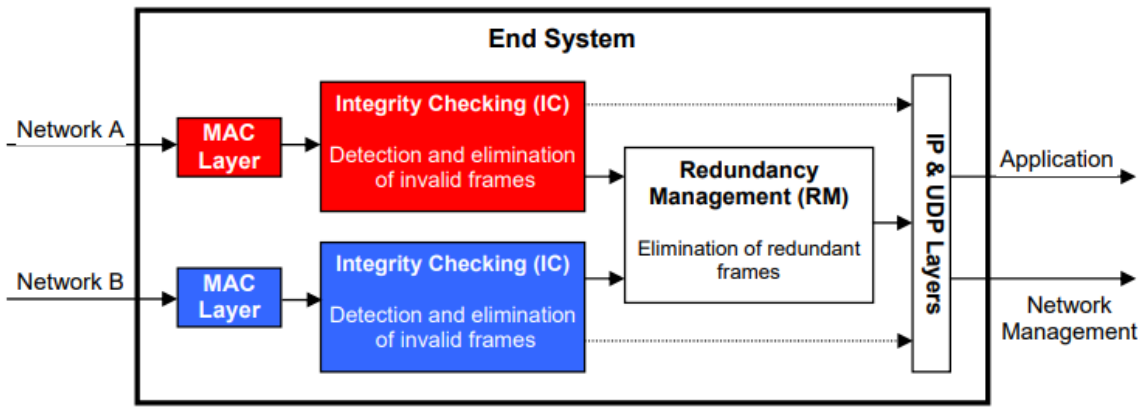

Figure 8: AFDX Integrity Checking and Redundancy Management

- **SN = Sequence number** (8-bit)
  - Unique to each VL

- **Integrity Checking**
  - Done for each network, one per VL, of End System nodes
  - Independent of Redundancy Management
  - Applied on the MAC layer using the SN of the ethernet frame

- **Transmitting Mode:**
  - Each frame is given a number from 0-255 with each frame number being 1+previous frame's SN
- **Receiving Mode:**
  - The IC algorithm accepts all frames that comply with one of the following criteria:
    - SN = 0 (The transmitting ES is started or reset)
    - SN = Previous SN + 1
    - SN = Previous SN + 2
    - All frames not complying with these criteria are discarded.

Image Source: https://web.archive.org/web/20150618140031/http://www.techsat.com/fileadmin/media/pdf/infokiosk/TechSAT_TUT-AFDX-EN.pdf

EMBRY-RIDDLE Aeronautical University

Switch Architecture

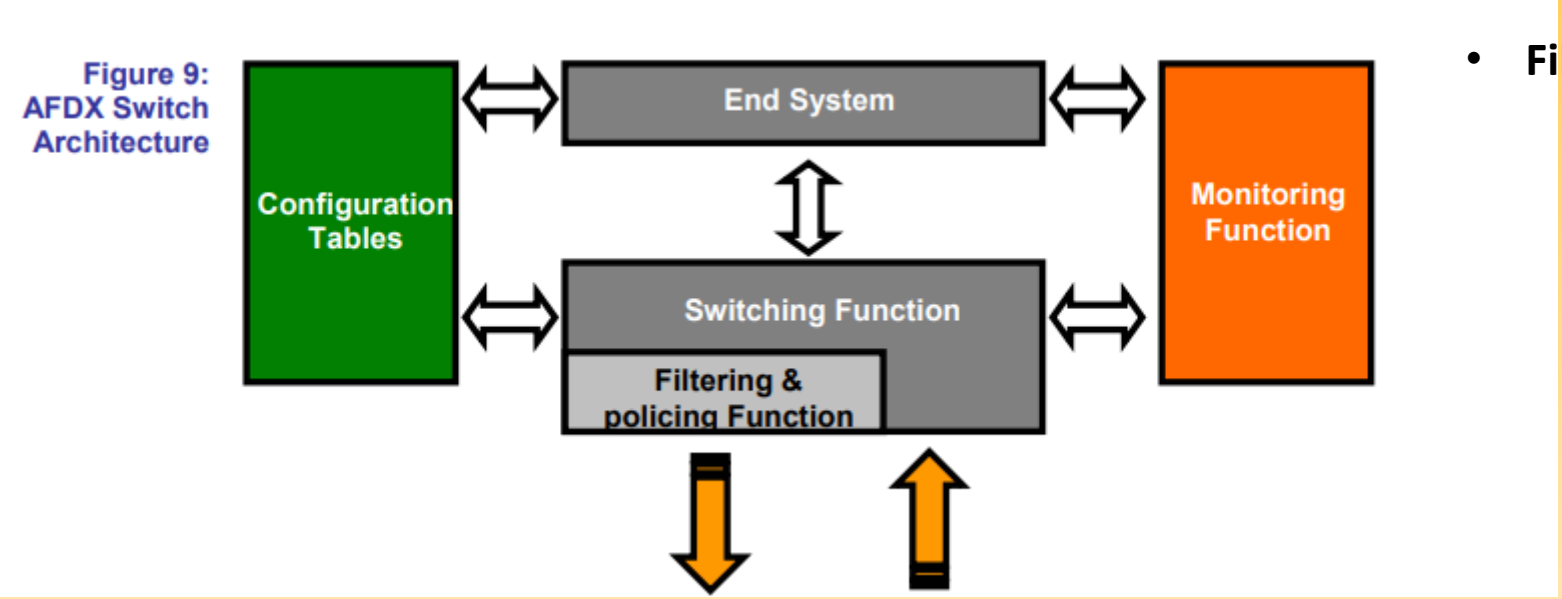

- **Filtering**
  - Confirm destination address
  - Received message on valid destination port
  - FCS validity
  - Ethernet frame size alignment
  - Ethernet frame size range
  - Adherence to MTU (maximum transfer unit in bytes) per VL

- **Traffic Policing**
  - Byte-based: filters out VL in terms of bandwidth usage
  - Frame-based: filters out VL in terms of bandwidth in frames per second.

- **Virtual Link Routing** – uses a 16-bit Virtual Link ID (VL ID) with frame as address for End System nodes (unlike MAC, used for Ethernet)

- **Configuration Tables** – define routing paths including input ports, output ports of a given VL ID.

Image Source: https://web.archive.org/web/20150618140031/http://www.techsat.com/fileadmin/media/pdf/infokiosk/TechSAT_TUT-AFDX-EN.pdf

Bandwidth allocation - Overhead

Protocol Type	Protocol Element	Size (bytes)
IEEE802.3	Preamble	7
IEEE802.3	SFD (Start Frame Delimiter)	1
IEEE802.3	MAC (Media Access Controller) Destination	6
IEEE802.3	MAC Source	6
IEEE802.3	Ethernet Type	2
RFC	IP (Internet Protocol) Header	20
RFC	UDP (User Datagram Protocol) Header	8
AFDX	RSN (Redundancy Sequence Number)	1
IEEE802.3	FCS (Frame Check Sequence)	4
IEEE802.3	IFG (Inter Frame Gap)	12
	Total:	67

Image Source: https://web.archive.org/web/20150618140031/http://www.techsat.com/fileadmin/media/pdf/infokiosk/TechSAT_TUT-AFDX-EN.pdf

Wrapping Up

Last Time:

Learned about MIL-STD-1553 a bus-based avionics architecture.

This Unit

Addresses the AFDX/ARINC 664 Standard created by Airbus, which utilizes ethernet and time-division multiplexing.

Coming up:

Discussion of space-based databuses and architectures.

What parts of aviation and space databuses are common and what are different given the application type?

Questions?

EMBRY-RIDDLE
Aeronautical University

Module References

- Past Presentations
  - Lecture slides prepared and reused from Dr. Timothy Wilson.
  - Lecture slides prepared and reused from Dr. Eduardo A. Rojas-Nastrucci.

- “Principals of Avionic Systems” by Al Helfrick, 4th edition.

- “Digital Avionics Handbook” by Spitzer, Ferrell, Ferrell.

- “Avionics Full Duplex Ethernet and the Time Sensitive Networking Standard” by Pasquier and Schneele, Airbus.